"Sketch No. 9

EXAMPLE OF A CONSTRUCTION OF A CONTAINER WITH SLIDING SHEETS

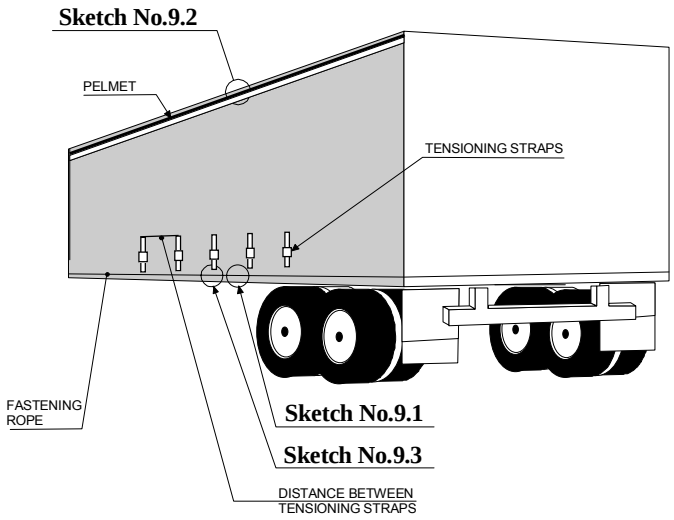

Sketch No. 9.1

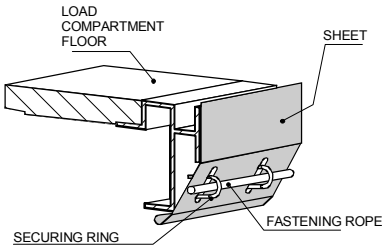

Sketch No. 9.2

SHEET GUIDANCE AND OVERLAP-TOP

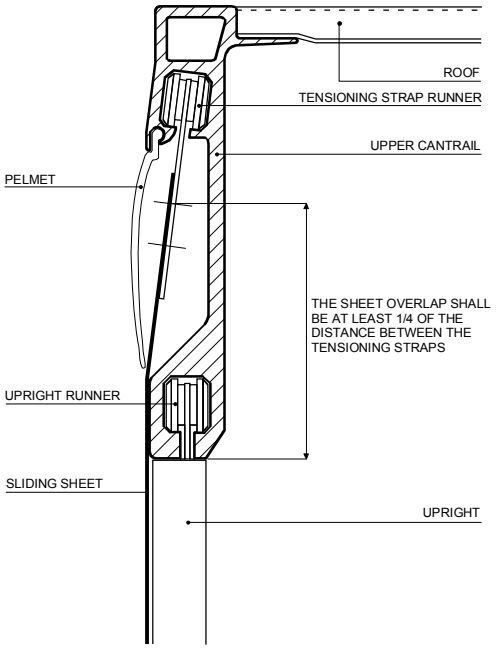

Sketch No. 9.3
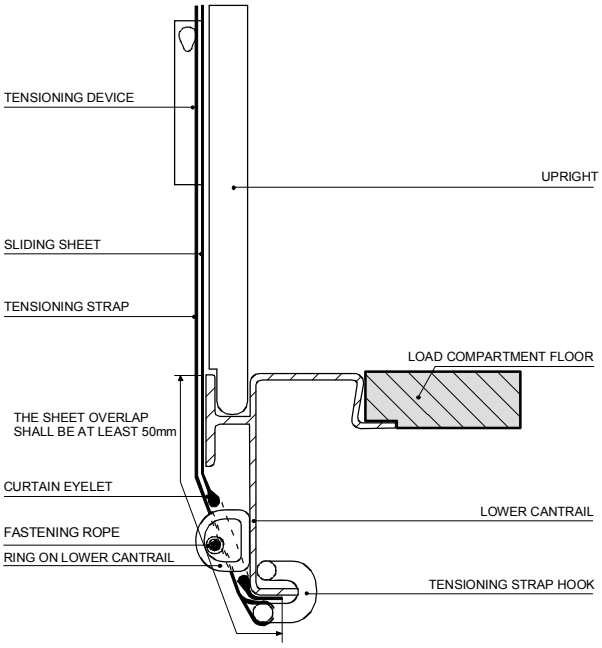
SHEET OVERLAP-BOTTOM